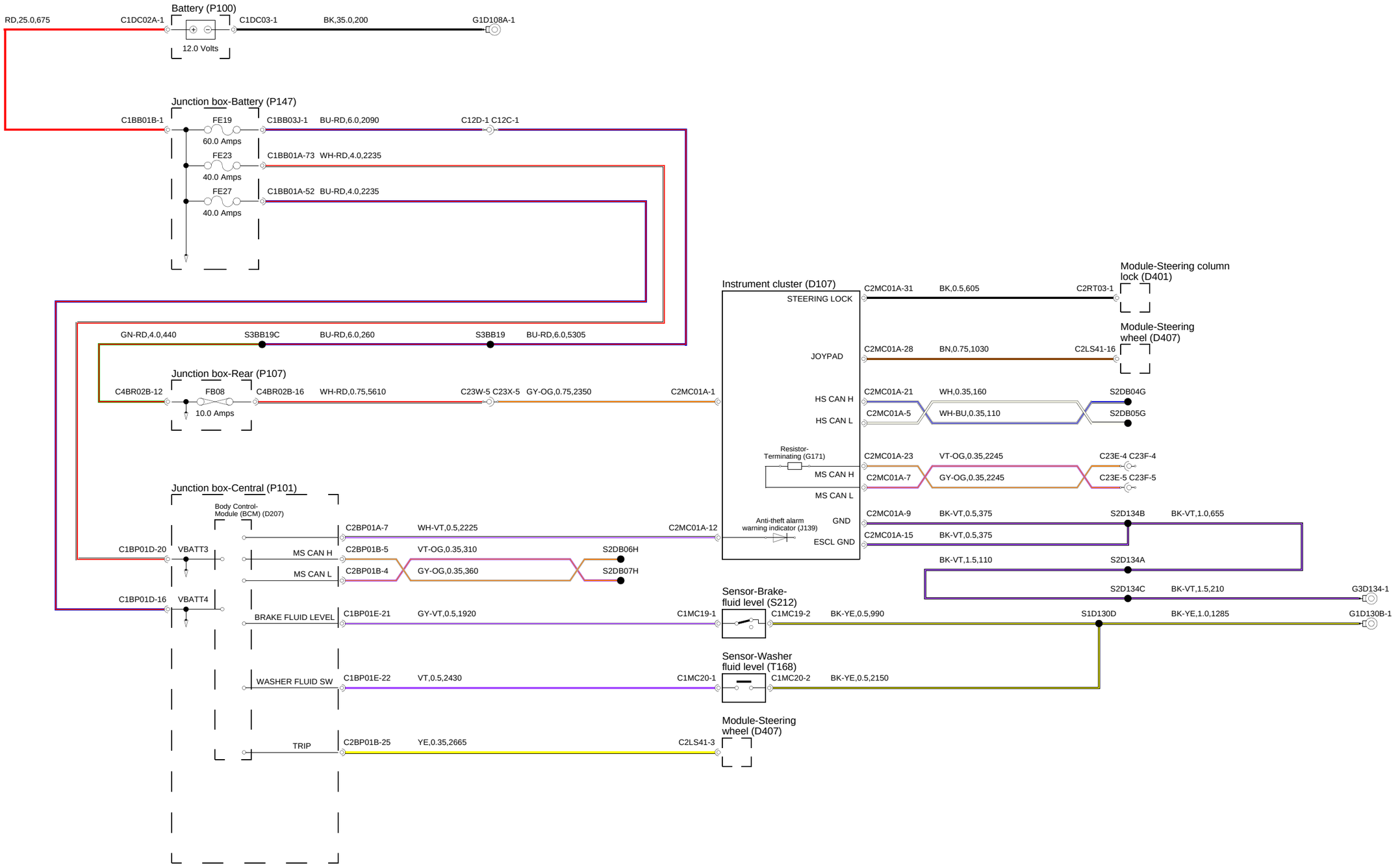
Battery (P100)
RD,25.0,675
C1DC02A-1
C1DC03-1
BK,35.0,200
G1D108A-1
12.0 Volts
Junction box-Battery (P147)
C1BB01B-1
FE19
60.0 Amps
C1BB03J-1
BU-RD,6.0,2090
C12D-1 C12C-1
FE23
40.0 Amps
C1BB01A-73
WH-RD,4.0,2235
FE27
40.0 Amps
C1BB01A-52
BU-RD,4.0,2235
GN-RD,4.0,440
S3BB19C
BU-RD,6.0,260
S3BB19
BU-RD,6.0,5305
Junction box-Rear (P107)
C4BR02B-12
FB08
10.0 Amps
C4BR02B-16
WH-RD,0.75,5610
C23W-5 C23X-5
GY-OG,0.75,2350
C2MC01A-1
Junction box-Central (P101)
Body Control-Module (BCM) (D207)
C1BP01D-20
VBATT3
C1BP01D-16
VBATT4
MS CAN H
MS CAN L
BRAKE FLUID LEVEL
WASHER FLUID SW
TRIP
C2BP01A-7
WH-VT,0.5,2225
C2BP01B-5
VT-OG,0.35,310
S2DB06H
C2BP01B-4
GY-OG,0.35,360
S2DB07H
C1BP01E-21
GY-VT,0.5,1920
C1BP01E-22
VT,0.5,2430
C2BP01B-25
YE,0.35,2665
C2MC01A-12
C1MC19-1
C1MC20-1
C2LS41-3
Instrument cluster (D107)
STEERING LOCK
JOYPAD
HS CAN H
HS CAN L
Resistor-Terminating (G171)
MS CAN H
MS CAN L
Anti-theft alarm warning indicator (J139)
GND
ESCL GND
C2MC01A-31
BK,0.5,605
C2RT03-1
Module-Steering column lock (D401)
C2MC01A-28
BN,0.75,1030
C2LS41-16
Module-Steering wheel (D407)
C2MC01A-21
WH,0.35,160
S2DB04G
C2MC01A-5
WH-BU,0.35,110
S2DB05G
C2MC01A-23
VT-OG,0.35,2245
C23E-4 C23F-4
C2MC01A-7
GY-OG,0.35,2245
C23E-5 C23F-5
C2MC01A-9
BK-VT,0.5,375
S2D134B
BK-VT,1.0,655
C2MC01A-15
BK-VT,0.5,375
BK-VT,1.5,110
S2D134A
S2D134C
BK-VT,1.5,210
G3D134-1
Sensor-Brake-fluid level (S212)
C1MC19-2
BK-YE,0.5,990
S1D130D
BK-YE,1.0,1285
G1D130B-1
Sensor-Washer fluid level (T168)
C1MC20-2
BK-YE,0.5,2150
Module-Steering wheel (D407)

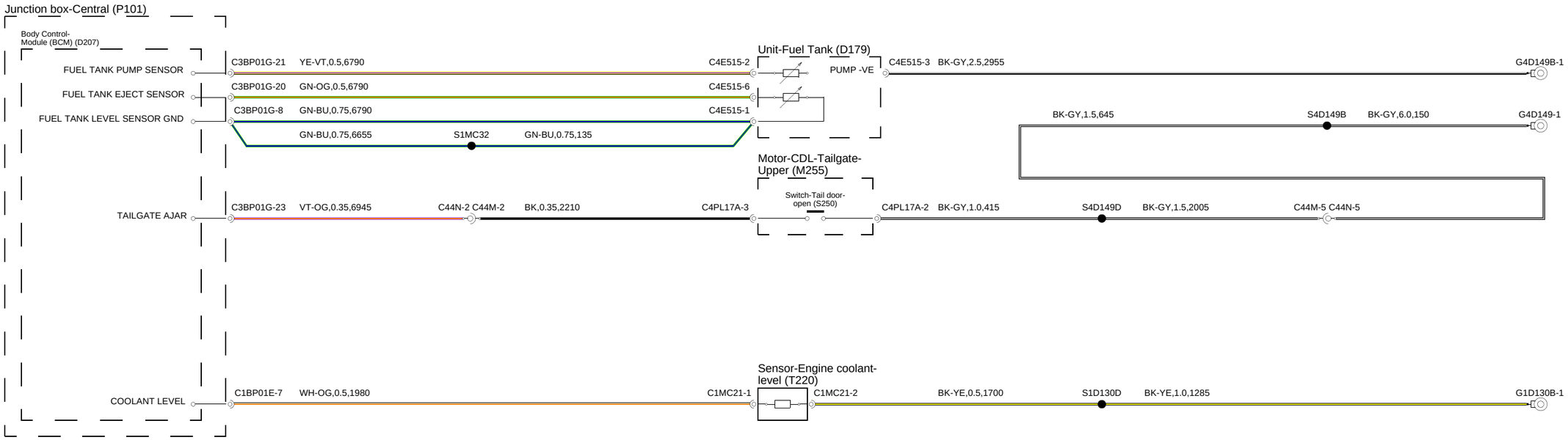
Junction box-Central (P101)
Body Control-Module (BCM) (D207)
FUEL TANK PUMP SENSOR
FUEL TANK EJECT SENSOR
FUEL TANK LEVEL SENSOR GND
TAILGATE AJAR
COOLANT LEVEL
C3BP01G-21 YE-VT,0.5,6790
C3BP01G-20 GN-OG,0.5,6790
C3BP01G-8 GN-BU,0.75,6790
GN-BU,0.75,6655 S1MC32 GN-BU,0.75,135
C3BP01G-23 VT-OG,0.35,6945 C44N-2 C44M-2 BK,0.35,2210
C1BP01E-7 WH-OG,0.5,1980
Unit-Fuel Tank (D179)
C4E515-2
C4E515-6
C4E515-1
PUMP -VE
C4E515-3 BK-GY,2.5,2955
G4D149B-1
BK-GY,1.5,645 S4D149B BK-GY,6.0,150 G4D149-1
Motor-CDL-Tailgate-Upper (M255)
Switch-Tail door-open (S250)
C4PL17A-3
C4PL17A-2 BK-GY,1.0,415 S4D149D BK-GY,1.5,2005 C44M-5 C44N-5
Sensor-Engine coolant-level (T220)
C1MC21-1
C1MC21-2 BK-YE,0.5,1700 S1D130D BK-YE,1.0,1285 G1D130B-1
Engine control module (ECM) (D131)
C1E104H-32 GN-BU,0.5,2100 (DIESEL)
C1E104H-43 YE-GN,0.5,2100 (DIESEL)
(PETROL)
Engine control module (ECM) (D131)
C1E105B-35 YE-GN,0.5,2215
C1E105B-34 GN-BU,0.5,2215 (PETROL)
C11P-6 C11N-6 YE-GN,0.5,2025 C12H-36 C12G-36 YE-GN,0.5,4375 C25C-19 C25B-19 YE-GN,0.35,1085 C5PM26B-5
GN-BU,0.5,4375 C25C-20 C25B-20 GN-BU,0.35,1085 C5PM26B-6
C11P-7 C11N-7 GN-BU,0.5,2025 C12H-31 C12G-31
Mirror-Door-Driver side (M168)
Sensor-Ambient air-temperature (T119)